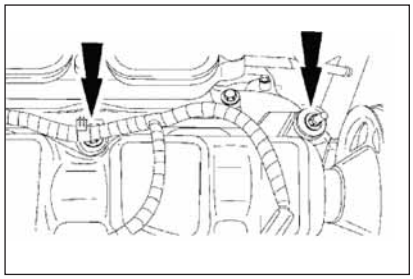

Figure 1 Cam cap listening points for 2001-'06 3.0L Ford engine.

Main Bearing Housing Bore Caution For 1993-2002 Ford/Mazda 2.5L VIN B & KL Engines

The AERA Technical Committee says there may be some confusion about how to properly determine the main bearing bore diameter on 1993-2002 Ford 2.5L VIN B and KL engines. This engine is made by Mazda and used in the Probe and 626 car models.

It appears some previously published information may have been inaccurate. Many service specifications have listed a housing bore diameter .002″ smaller than it should be.

While the amount of inaccuracy may seem minimal, if the diameter is used, it will provide insufficient main bearing oil clearance.

The correct main bearing housing bore size for the 2.5L engines listed above should actually be 2.6378″-2.6384″ (67.000-67.016 mm). Desired main bearing oil clearance is listed as .0015″-.0022″ (.038-.056 mm).

Engine Ticking Noise On 2001-2006 Ford 3.0L VIN S Engines

If you have received questions or complaints about a ticking noise in certain Ford 3.0L engines, you're not alone.

Some 2001-2005 Taurus/Sable, 2001-2006 Escape and 2005-2006 Mariner vehicles built prior to 1-17-2006 and equipped with the 3.0L 4V Duratec engine may exhibit a ticking noise from the left bank cylinder head, only when the engine is at normal operating temperature.

The ticking noise may be coming from the left hand intake camshaft at cylinder No. 6. Your installer customers can easily diagnose this condition, with the engine running at normal operating temperature, using a mechanic's stethoscope (**Figure 1 left**). If the ticking noise can be verified at those locations, refer to this service procedure.

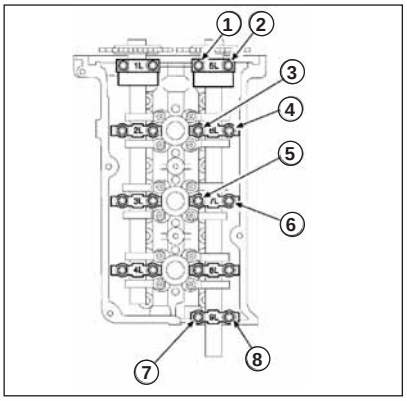

Figure 2 Torque sequence for 2001-'06 3.0L Ford engine.

1) Remove the left bank valve cover.

2) Rotate the engine clockwise until the cylinder number 6 intake cam lobes are pointing up and the valves are fully closed.

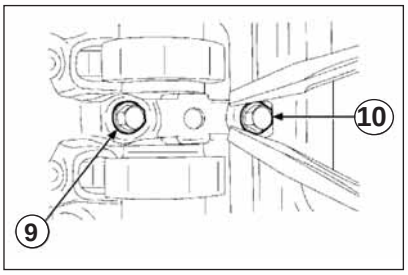

Figure 3 Apply pressure and shift cap No. 8L toward exhaust side on 3.0L engines.

3) Remove all left hand intake cam caps individually and reinstall them finger tight. Note: the camshaft caps must be completely lifted off and then set back into position. Loosening and re-torqueing cap bolts is not sufficient.

4) Torque bolts in sequence shown in **Figure 2** (below) to 72 in.lbs. (8 Nm) excluding No. 8L camshaft cap.

5) Using a screwdriver positioned on each side of the top of cam cap No. 8L (**Figure 3**, below) apply hand pressure and shift cam cap No. 8L toward the exhaust side of the cylinder head.

6) While holding cam cap No. 8L in the shifted position, torque the fasteners, No. 9 (inboard) first, to 72 in.lbs. (8 Nm) then torque fastener No. 10 to 72 in.lbs. (8 Nm) (Figure 3).

7) Install the left hand camshaft cover.

8) Fully warm the engine to normal operating temperature to verify the repair.

Balance Shaft Timing Procedures For 2000-2006 Ford 4.0L VIN E & K Engines

The AERA Technical Committee offers the following information regarding the proper balance shaft timing for certain 2000-2006 Ford 4.0L VIN E and K engines. The information in this bulletin applies only to those all-wheel- or four-wheel-drive vehicles that use a balance shaft engine.

To correctly time the balance shaft for this engine, first locate the number one cylinder piston at top dead center. The number one cylinder on this engine is located at the farthest front, right bank.

1) Install the balance shaft assembly

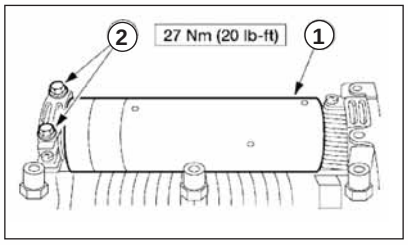

Figure 4 Balance shaft assembly torque specs (20 ft.lbs) for 4.0L Ford engine.

(**Figure 4**, page 2).

2) Tighten the bolts to 20 ft.lbs. (27 Nm).

3) Align the timing marks. NOTE: due to the gear ratio between the reversal shaft and the balance shaft, up to seven complete turns of the balance shaft may be required to find the correct position.

4) Install a 4 mm (0.16″) pin to hold the shaft in place

5) Install the balance shaft chain and crankshaft sprocket.

6) Install the balance shaft tensioner.

7) Install the tensioner bolts (2) and torque to 21 ft.lbs. (29 Nm)

8) Position the balance shaft chain guide and install the two bolts (3) to 89 in.lbs. (10 Nm).

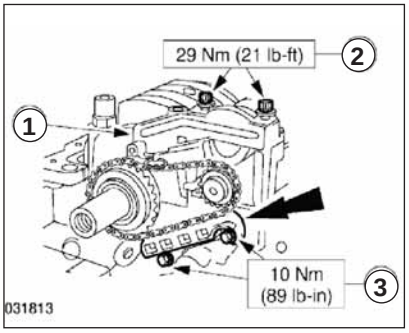

Figure 5 3.0L Ford engine balance shaft tensioner torque specifications.

Revised Valve Springs For 1997-2002 Ford 4.0L VIN E & K Engines

The AERA Technical Committee says that a revised valve spring for 1997-2002 Ford VIN E & K engines should eliminate a stored P0300 or P0301 trouble code on some vehicles.

Some Ford vehicles equipped with the 4.0L SOHC engine may exhibit a CHECK ENGINE LIGHT "ON" with Diagnostic Trouble Codes (DTC) P0300 (Random Misfire) or P0301. The DTC will be set when the engine is operated at high rpms (4,800 rpm and higher). The misfire code is the result of system interaction of higher than expected transient exhaust system backpressure (under heavy acceleration) coupled with valve spring resonance points experienced at these engine speeds. This interaction may cause the exhaust valve to hang open at engine speeds of 4,800 rpm and higher.

To correct, verify that the DTC sets only at 4,800 rpm or higher. Remove current intake and exhaust valve springs (p/n F77Z-6513-M) and replace with new service intake and exhaust valve springs (p/n 2L2Z-6513-AA).

Note: All 12 valve springs (six of each, intake and exhaust) must be replaced in order to ensure proper valvetrain dynamics.

Some machine shops have elected to replace all springs with the updated version any time the heads are serviced.

Crankshaft Thrust Face Failures on 1985-2003 Ford 4.2L and 5.0L Engines

The AERA Technical Committee offers the following information regarding crankshaft thrust failures on 1985-2003 Ford 4.2 and 5.0L engines. This issue seems to be more pronounced when these engines are used in light duty trucks equipped with an automatic transmission.

When dealing with thrust failure on any engine, the key issues remain, surface finish, alignment and loading. The following information should be viewed as specific guidelines for these crankshafts.

The information in this bulletin focuses on automatic transmission applications, since that seems to be where the majority of the failures occur.

What to Know

- Was there a prior problem with the thrust bearing?
- Were there any transmissions problems that need to be corrected?
- Has the transmission overheated?
- What is the condition of the transmission fluid?
- Is the proper flex plate being used?
- Are the proper flex plate bolts being used?
- Did the torque converter engage into the pump correctly?
- Are the dowel pins to align the transmission in place?
- Have the external transmission cooling lines and cooler been checked for proper flow and pressure?
- Because these transmissions are electronically controlled you should make certain that they have proper ground.

Note

Ford service TSB 00-1-5 says anytime the transmission is removed for service the cooler must be tested.

If the vehicle has a stand alone oil-to-air transmission cooler it MUST be replaced and the rest of the system cleaned, flushed, and backflushed anytime the transmission is overhauled or replaced. On all others (except where they have temperature by-pass valves) you MUST clean, flush, and backflush the complete transmission fluid cooling system. See Ford TSB 00-23-10.

Also, Ford is currently recommending the installation of an in-line transmission fluid filter on E4OD, 4R100, 4R70W and other Ford automatic transmissions with 8 mm and 9.5 mm transmission cooling lines. It is recommended that this in-line filter be replaced every 30,000 miles.

Surface Finish

Crankshaft thrust faces are difficult to grind because they are done using the side of the grinding wheel. Grinding marks left on the crankshaft face produce a visual swirl or sunburst pattern with scratches sometimes crisscrossing one another in a crosshatch pattern similar to hone marks on a cylinder wall. If these grinding marks are not completely removed by polishing,

they will remove the oil film from the surface of the thrust bearing much like windshield wipers remove water.

The grinding wheel side face must be dressed periodically to provide a clean, sharp cutting surface. A grinding wheel that does not cut cleanly may create hot spots on the surface leading to a wavy, out-of-flat surface. The side of the wheel must also be dressed at exactly 90° to its outside diameter to produce a thrust face that is square to the axis of the main bearings.

A properly finished crankshaft thrust face should only have very fine polish marks that go around the surface in a circumferential pattern. Remember smoother and flatter are better. For these applications a surface finish of 10 Ra or better is highly recommended.

Loading

At the most basic level there is very little load placed on the thrust bearing by the engine itself during operation. Nearly the entire horizontal loading on the crankshaft comes from external sources either at the front or rear of the engine.

Thrust Bearing Help

When a problem application is encountered, every effort should be made to find the cause of distress and correct it before completing repairs or you risk a repeat failure.

A simple modification to the upper thrust bearing may help in problem applications. Install the upper thrust bearing in the block to determine which thrust face is toward the rear of the engine.

Figure 6 Increase parting line inside chamfer to approximately .040˝ from groove to rear only 4.2L and 5.0L engines.

Use a small, fine toothed, flat file to increase the chamfer on the ID edge of the bearing parting line from the oil groove to the rear thrust face only (see **Figure 6**, below). This enlarged ID chamfer will allow pressurized oil from the bearing oil groove to reach the loaded thrust face without passing through the bearing's clearance space first. Since there is a load against the rear thrust face, the load should restrict oil flow and there should not be a noticeable loss in oil pressure. Although this modification is not a guaranteed cure-all it should help if all other conditions, such as surface finish, alignment, cleanliness and loading are within reasonable limits.

A previously published AERA Technical Bulletin (TB1465R) has information concerning crankshaft thrust bearing failures; it may also be referenced for additional information.

Lower Intake Manifold Installation For 1993-'96 DOHC 4.6L VIN V Engines

The AERA Technical Committee offers the following information regarding the installation of the lower intake manifold on 1993-96 Ford 4.6L VIN V engines, the DOHC design used in Lincoln vehicles.

This engine uses a combination of twenty long and short studs and nuts as

Circle 205 for more information

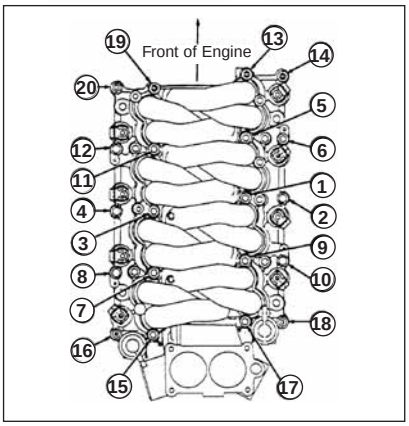

Figure 7 Lower intake manifold torque sequence for '93-'96 4.6L engines.

well as four mounting bolts to secure the lower intake manifold to the cylinder heads. The correct installation procedures must be used to obtain an effective long lasting gasket seal. Review the steps and procedures listed here before attempting installation.

1) Clean and verify cylinder head and intake manifold surfaces are true and flat within .002″ (.051 mm).

2) Install new intake manifold gaskets.

3) Following the sequence shown in **Figure 7** (above), tighten fasteners numbered 5, 7, 9, and 11 to 9-11 ft.lbs.

4) In sequence, tighten the remaining numbered fasteners to 13-16 ft.lbs.

5) In sequence, rotate all twenty fasteners an additional 85-95°.

6) Tighten the 4 intake manifold runner control (IMRC) bolts to 71-89 in.lbs. in sequence (A, B, C, D) as shown in **Figure 8** (below).

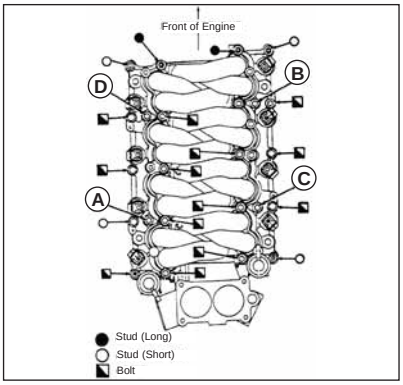

Figure 8 Torque sequence for 4.6L engine intake manifold runner control bolts.

7) In sequence, tighten them an additional 85-95°.

Timing Chain Link Identification For 1991-2006 Ford 4.6L & 5.4L VIN 9, W, X, Y & L Engines

Originally, the timing chain used in 1991-2006 Ford SOHC 4.6L and 5.4L VIN 9, W, X, Y and L engines had copper colored links to assist in obtaining the proper cam to crank timing. If the coloring has been removed or is missing on a new chain assembly, identifying the proper links to mark is quite simple.

If the copper links are not visible, lay the timing chain entirely out. After doing so, clean and mark the two adjacent links on one end and the single link on the other end. You have now positively identified the proper plates to reference during timing chain assembly.

Broken Exhaust Manifold Studs On 1997-2005 Ford 5.4L VIN L Engines

The AERA Technical Committee offers the following information regarding broken exhaust manifold bolts on 1999-2005 Ford 5.4L VIN L engines. This information applies to non-supercharged truck engines. Generally, this condition is first noticed because of excessive exhaust noise caused by manifold leakage.

This engine is used in the following vehicles:

FORD: 1997-2004 Expedition, F-150; 1999-2004 F-Super Duty; 1999-2005 E-Series.

LINCOLN: 1998-1999 Navigator

To reduce the likelihood of subsequent failure after repair, Ford now offers a stainless steel stud (p/n W703902-S403) and nut (p/n W701706-S2) for these applications. Although the supercharged versions of this engine have not exhibited stud or nut failure, the new parts could be used for those applications as an upgrade.

Any time these repairs are made, the exhaust manifold gasket(s) must also be replaced for an effective repair. To install the components, torque the studs in the cylinder head to 71-115 in.lbs. (8-13 Nm) and torque the nuts on studs to 204-239 in.lbs. (23-27 Nm).

Revised Upper Oil Pan Assembly For 2003-04 Navistar/ International 6.0L Diesel Engines

(TB2380)The AERA Technical Committee offers the following information regarding a revised upper oil pan assembly for 2003-2004 Navistar/International 6.0L diesel engines. This information should be considered any time an engine swap or components are replaced.

A new production and service upper oil pan assembly was released for 2003 through 2004 truck and conventional bus VT 365 diesel engine applications. See **Figure 9** and **Chart 1** (page 7) for details.

This new upper oil pan assembly has eliminated the center bosses with mounting bolt holes found on engines built before Model Year 2004 (see Figure 9). The new assembly is compatible with Model Year 2003 engines. The old mounting bolts (M6 x 25) can be reused. The old center boss mounting bolts (M8 x 40) can be discarded.

A new production and service upper oil pan assembly has also been released for Truck, Rear Engine (RE) Bus, Semi Forward Control (SFC) Bus, and Stripped Chassis VT 365 diesel engine applications.

This new upper oil pan assembly has retained the offset and removed the center bosses with mounting bolt holes (see **Figure 10**) page 7. The new assembly is compatible with all

VT 365 Application	Model Year	New Part No.	Old Part No.
Truck - *Some 2002 m/y trucks may have 2003 m/y modified upper oil pan assembly due to midyear design change. See Figure 1 (1843537C91).*	2002	1845436C91	1837341C91
RE Bus	2004	"	Not applicable
SFC Bus	2004	"	Not applicable
Stripped Chassis	2004	1845436C91	Not applicable

Chart 1 Revised oil pan assembly identification on 6.0L diesel applications.

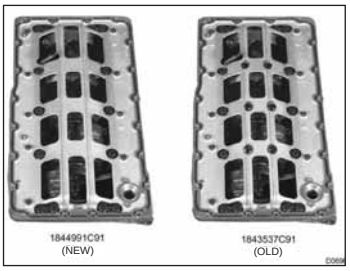

Figure 9 6.0L diesel Truck and Conventional Bus upper oil pan assembly.

engines using upper oil pan with offset feature. The old mounting bolts (M6 x 25) can be reused. The old center boss mounting bolts (M8 x 40) can be discarded.

High Pressure Oil Pump Leakage On 1998-2003 Ford 7.3L VIN F Engines

The AERA Technical Committee offers the following information regarding high pressure oil pump leakage on 1998-2003 Ford 7.3L VIN F diesel engines. Some 1998-2003 E-Series, 1999-2003 Super Duty, 2000-2003 Excursion and 2000-2003 F650/750 vehicles equipped with a 7.3L Diesel engine may exhibit an oil leak at the high pressure oil pump outlet fittings and/or end plug (see **Figure 11**, above right).

This type of leak may appear to be a rear main crankshaft seal, oil pan gasket, or other engine oil leak due to the drain hole machined in the crankcase valley which allows any oil in the valley to run down the back of the engine.

High pressure oil pump leaks at the outlet fittings and/or end plug can be serviced without removing the pump assembly. Replace the three O-rings on the fillings and the end plug using Kit 2C3Z-9G804-AA. Apply liquid thread sealer (included in the kit) prior to reinstallation.

Note: do not remove the bottom plug. ***TSG***

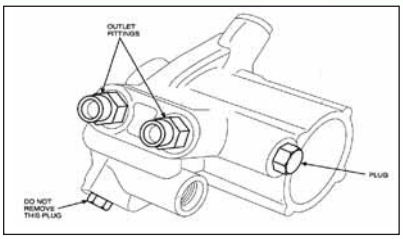

Figure 11 7.3L engine oil pump fittings.

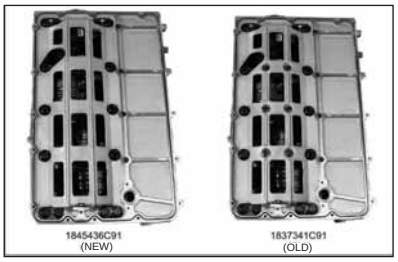

Figure 10 6.0L diesel Truck, RE, SFC Bus, and Stripped Chassis upper oil pan assembly.

Circle 207 for more information